FRUCOSOL FREEZER JUICER
SPARE PARTS LIST
2018

Current for Period
Jan 2018 - Jun 2018

DIAGRAM PART	PART NO	DESCRIPTION	LIST EX GST	GST	LIST INC GST
1	64601	BLACK SCREW	$ 21.80	$ 2.18	$ 23.98
2	64602	TURNTABLE	$ 545.55	$ 54.56	$ 600.11
3	64603	TOOTH GEARING 60	$ 113.50	$ 11.35	$ 124.85
4	64604	BLACK CUT SPACER	$ 17.45	$ 1.75	$ 19.20
5	64605	SCREW M5*8	$ 2.20	$ 0.22	$ 2.42
6	64606	INOX GEARING 18	$ 157.10	$ 15.71	$ 172.81
7	64607	FEEDER SHAFT WITH PEG	$ 157.10	$ 15.71	$ 172.81
8	64608	FEEDER MOTOR	$ 1,091.15	$ 109.12	$ 1,200.27
9	64609	FEEDER CAPACITOR	$ 78.55	$ 7.86	$ 86.41
10	64610	BLACK SPACER	$ 17.45	$ 1.75	$ 19.20
11	64611	TOP CASE BACK	$ -	$ -	$ -
12	64612	UNDER CASE BACK	$ -	$ -	$ -
13	64613	SCREW M5*10	$ 2.20	$ 0.22	$ 2.42
14	64614	FEEDER MOTOR COVER	$ 161.50	$ 16.15	$ 177.65
15	64615	SCREW M5*10	$ 2.20	$ 0.22	$ 2.42
16	64616	FEEDER	$ 3,273.40	$ 327.34	$ 3,600.74
17	64617	RAMP A	$ 130.95	$ 13.10	$ 144.05
18	64618	RAMP B	$ 130.95	$ 13.10	$ 144.05
19	64619	HINGE	$ 157.10	$ 15.71	$ 172.81
20	64620	SCREW M4*10	$ 2.20	$ 0.22	$ 2.42
21	64621	DOOR GLASS	$ 69.85	$ 6.99	$ 76.84
22	64622	FRONT COVER	$ 654.70	$ 65.47	$ 720.17
23	64623	BLACK SCREW	$ 17.45	$ 1.75	$ 19.20
24	64624	INOX CUBE	$ 196.40	$ 19.64	$ 216.04
25	64625	TRAY FOR GLASSES	$ 87.30	$ 8.73	$ 96.03
26	64626	GRATING FOR GLASSES	$ 109.10	$ 10.91	$ 120.01
27	64627	FILTER	$ 196.40	$ 19.64	$ 216.04
28	64628	FILTER SHOOTER	$ 34.90	$ 3.49	$ 38.39
29	64629	FILTER FUNNEL	$ 327.35	$ 32.74	$ 360.09
30	64630	BOTTOM M4	$ 26.20	$ 2.62	$ 28.82
31	64631	PEEL EXTRACTOR R	$ 65.45	$ 6.55	$ 72.00
32	64632	PEEL EXTRACTOR L	$ 65.45	$ 6.55	$ 72.00
33	64633	SUPPORT EXTRACTOR R	$ 52.35	$ 5.24	$ 57.59
34	64634	SUPPORT EXTRACTOR I	$ 52.35	$ 5.24	$ 57.59
35	64635	SQUEEZER BALL	$ 139.65	$ 13.97	$ 153.62
36	64636	SUPPORT CUTTING BLADE	$ 87.30	$ 8.73	$ 96.03
37	64637	CUTTING BLADE	$ 157.10	$ 15.71	$ 172.81
38	64638	SCREW M5*10	$ 2.20	$ 0.22	$ 2.42
39	64639	YELLOW SCREW	$ 17.45	$ 1.75	$ 19.20
40	64640	HOLLOW ITEM	$ 139.65	$ 13.97	$ 153.62
41	64641	SUPPORT FRONT COVER	$ 26.20	$ 2.62	$ 28.82
42	64642	SQUEEZER SHAFT 4	$ 200.75	$ 20.08	$ 220.83
43	64643	SQUEEZER SHAFT 3	$ 200.75	$ 20.08	$ 220.83
44	64644	SQUEEZER SHAFT 2	$ 200.75	$ 20.08	$ 220.83

FRUCOSOL FREEZER JUICER
SPARE PARTS LIST
2018

Current for Period
Jan 2018 - Jun 2018

DIAGRAM PART	PART NO	DESCRIPTION	LIST EX GST	GST	LIST INC GST
45	64645	SQUEEZER SHAFT 1	$ 200.75	$ 20.08	$ 220.83
46	64646	PEG 35'	$ 65.45	$ 6.55	$ 72.00
47	64647	PEG 55'	$ 65.45	$ 6.55	$ 72.00
48	64648	BEARING OF SQUEEZER SHAFT	$ 52.35	$ 5.24	$ 57.59
49	64649	O-RING SEAL	$ 6.55	$ 0.66	$ 7.21
50	64650	YELLOW SPACER	$ 30.55	$ 3.06	$ 33.61
51	64651	PEG 78'	$ 87.30	$ 8.73	$ 96.03
52	64652	SECURITY SWITCH	$ 30.55	$ 3.06	$ 33.61
53	64653	FEEDER SWITCH	$ 17.45	$ 1.75	$ 19.20
54	64654	CONICAL GEAR 29	$ 192.05	$ 19.21	$ 211.26
55	64655	CONICAL GEAR 14	$ 165.85	$ 16.59	$ 182.44
56	64656	SEPARATOR LARGE	$ 26.20	$ 2.62	$ 28.82
57	64657	SEPARATOR SHORT	$ 26.20	$ 2.62	$ 28.82
58	64658	SWITCH	$ 17.45	$ 1.75	$ 19.20
59	64659	FUSE HOLDER	$ 13.10	$ 1.31	$ 14.41
60	64660	FUSE	$ 2.20	$ 0.22	$ 2.42
61	64661	MOTOR	$ 1,091.15	$ 109.12	$ 1,200.27
62	64662	NETWORK CABLE COVER	$ 26.20	$ 2.62	$ 28.82
63	64663	NETWORK CABLE	$ 52.35	$ 5.24	$ 57.59
64	64664	MOTOR CAPACITOR	$ 78.55	$ 7.86	$ 86.41
65	64665	JUNCTION BOX	$ -	$ -	$ -
66	64666	SUPPORT JUNCTION BOX	$ -	$ -	$ -
67	64667	LEG	$ 17.45	$ 1.75	$ 19.20
68	64668	SCREW M5*10	$ 2.20	$ 0.22	$ 2.42
69	64669	WASHER M8	$ 2.60	$ 0.26	$ 2.86
70	64670	NUT M8	$ 2.60	$ 0.26	$ 2.86
71	64671	SCREW M8*25	$ 2.20	$ 0.22	$ 2.42
72	64672	TOOTH GEARING 45-4	$ 104.75	$ 10.48	$ 115.23
73	64673	TOOTH GEARING 45-3	$ 104.75	$ 10.48	$ 115.23
74	64674	TOOTH GEARING 60-1	$ 113.50	$ 11.35	$ 124.85
75	64675	TOOTH GEARING 60-2	$ 113.50	$ 11.35	$ 124.85
76	64676	MACHINE'S BODY	$ -	$ -	$ -
77	64677	STAND	$ -	$ -	$ -
78	64678	WHEEL	$ 82.95	$ 8.30	$ 91.25
79	64679	WHEEL WITH BRAKE	$ 82.95	$ 8.30	$ 91.25
80	64680	INOX SLOPES	$ 349.15	$ 34.92	$ 384.07
81	64681	STAND SHOOTER	$ 152.75	$ 15.28	$ 168.03
82	64682	STAND LOCK	$ 174.60	$ 17.46	$ 192.06
83	64683	DEPOSIT	$ 445.20	$ 44.52	$ 489.72
84	64684	DEPOSIT'S JOINT	$ 26.20	$ 2.62	$ 28.82
85	64685	GREEN LIGHT BUTTON	$ 43.65	$ 4.37	$ 48.02
86	64686	DRIPPING RACK	$ 39.30	$ 3.93	$ 43.23
87	64687	DRIPPING TRAY	$ 65.45	$ 6.55	$ 72.00
88	64688	FAUCET LEVER SUPPORT	$ 52.35	$ 5.24	$ 57.59

FRUCOSOL FREEZER JUICER
SPARE PARTS LIST
2018

Current for Period
Jan 2018 - Jun 2018

DIAGRAM PART	PART NO	DESCRIPTION	LIST EX GST	GST	LIST INC GST
89	64689	FAUCET LEVER	$ 74.20	$ 7.42	$ 81.62
90	64690	FAUCET STICK	$ 226.95	$ 22.70	$ 249.65
91	64691	FAUCET STICK JOINT	$ 8.75	$ 0.88	$ 9.63
92	64692	JOINT OF THE FAUCET ENTRANCE GUIDE	$ 8.75	$ 0.88	$ 9.63
93	64693	FAUCET ENTRANCE GUIDE	$ 65.45	$ 6.55	$ 72.00
94	64694	MAGNETO LID	$ 43.65	$ 4.37	$ 48.02
95	64695	COLER PUMP MAGNETO	$ 248.80	$ 24.88	$ 273.68
96	64696	FOOT	$ 39.30	$ 3.93	$ 43.23
97	64697	MIXING MOTOR	$ 763.80	$ 76.38	$ 840.18
98	64698	ZINC PALTED SCREW	$ 8.75	$ 0.88	$ 9.63
99	64699	THERMOSTAT	$ 235.70	$ 23.57	$ 259.27
101	64700	FAN	$ 187.65	$ 18.77	$ 206.42

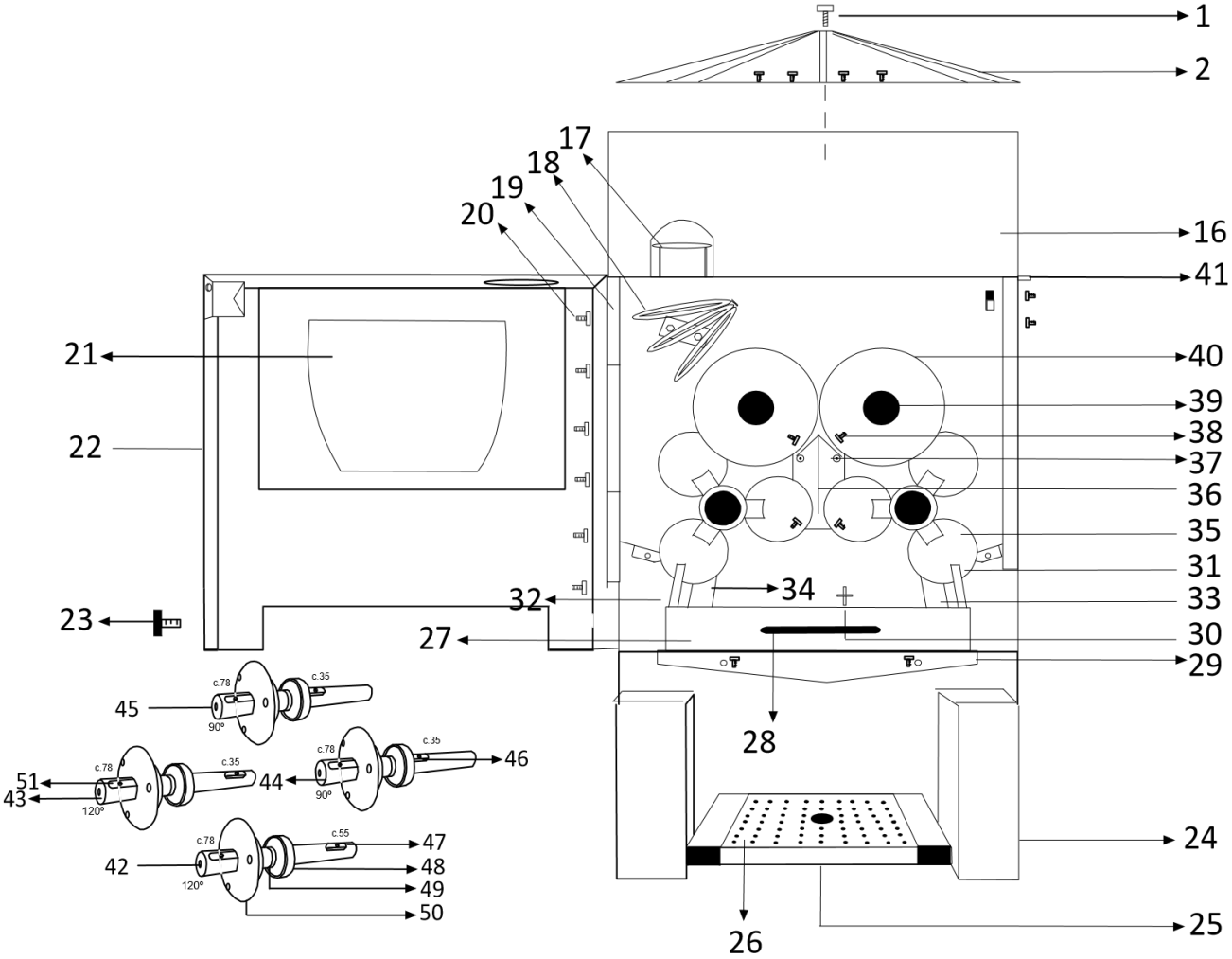

FRUCOSOL FREEZER JUICER
SPARE PARTS LIST
2018
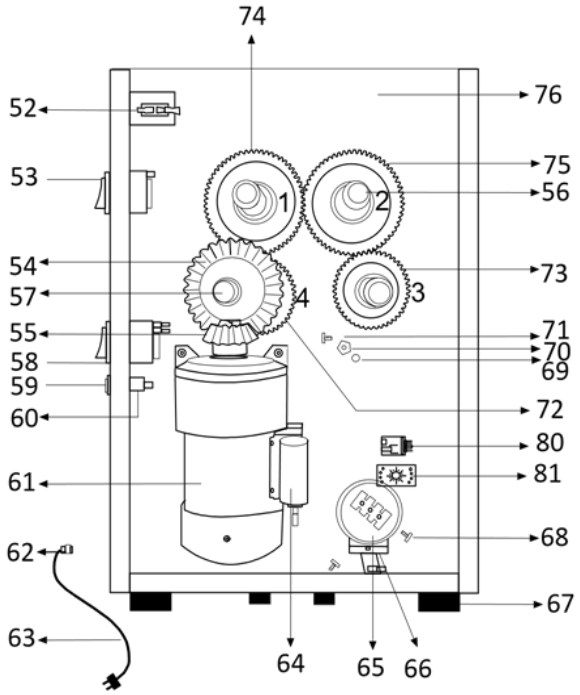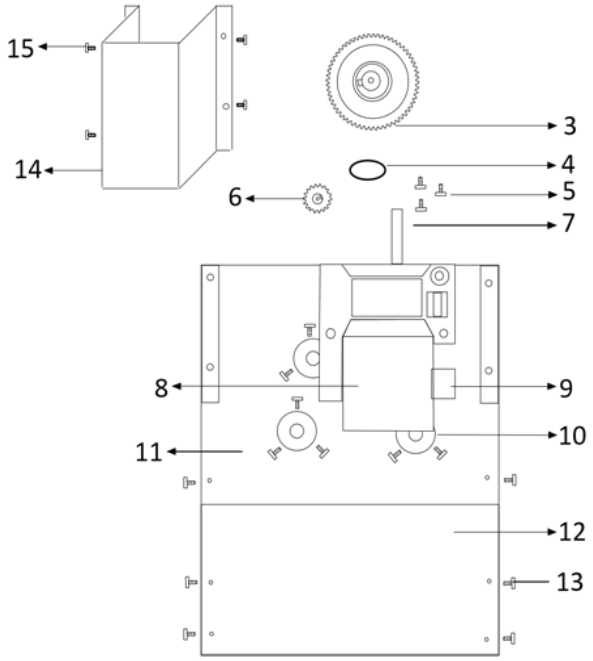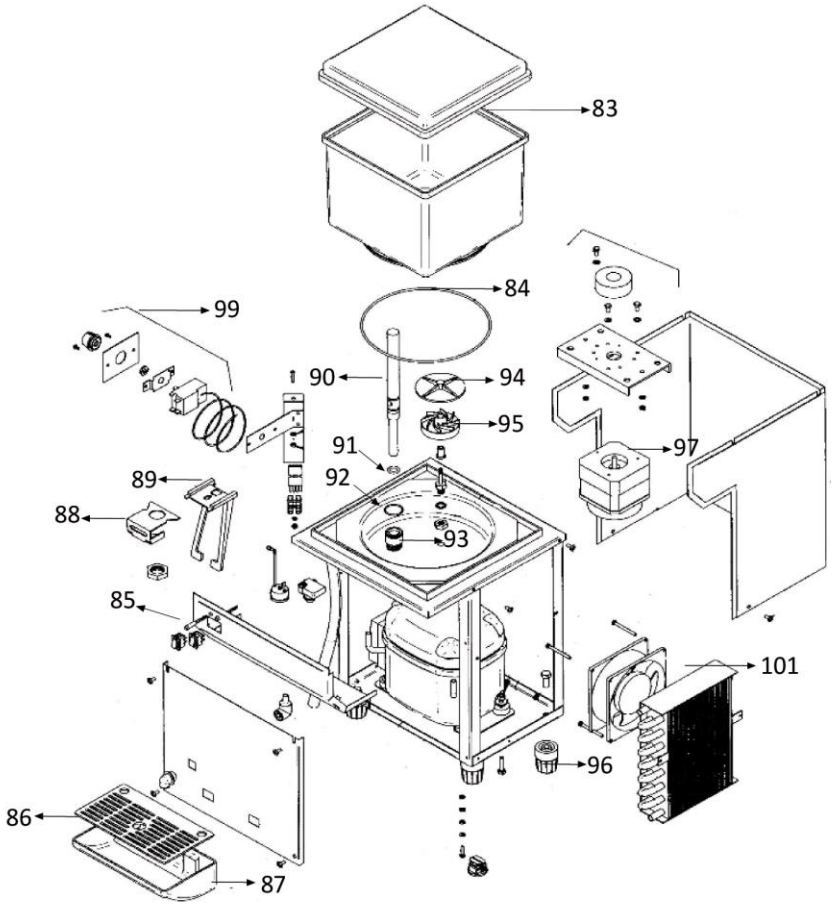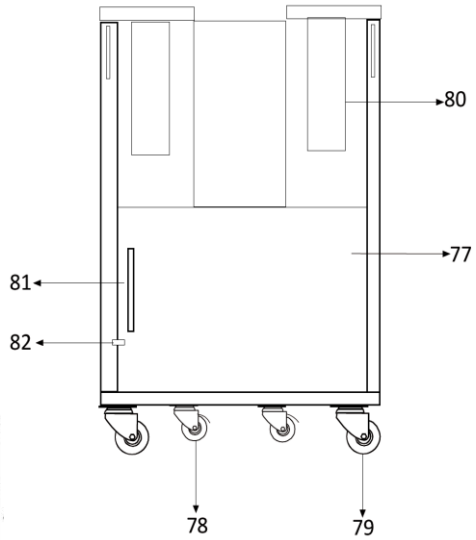
Current for Period
Jan 2018 - Jun 2018