FRUCOSOL SELF SERVICE JUICER
SPARE PARTS LIST
2018

Current for Period
Jan 2018 - Jun 2018

DIAGRAM PART	PART NO	DESCRIPTION	LIST EX GST	GST	LIST INC GST
1	64501	BLACK SCREW	$ 21.80	$ 2.18	$ 23.98
2	64502	TURNTABLE	$ 545.55	$ 54.56	$ 600.11
3	64503	TOOTH GEARING 60	$ 113.50	$ 11.35	$ 124.85
4	64504	BLACK CUT SPACER	$ 17.45	$ 1.75	$ 19.20
5	64505	SCREW M5*8	$ 2.20	$ 0.22	$ 2.42
6	64506	INOX GEARING 18	$ 157.10	$ 15.71	$ 172.81
7	64507	FEEDER SHAFT WITH PEG	$ 157.10	$ 15.71	$ 172.81
8	64508	FEEDER MOTOR	$ 1,091.15	$ 109.12	$ 1,200.27
9	64509	FEEDER CAPACITOR	$ 78.55	$ 7.86	$ 86.41
10	64510	BLACK SPACER	$ 21.80	$ 2.18	$ 23.98
11	64511	TOP CASE BACK	$ -	$ -	$ -
12	64512	UNDER CASE BACK	$ -	$ -	$ -
13	64513	SCREW M5*10	$ 2.20	$ 0.22	$ 2.42
14	64514	FEEDER MOTOR COVER	$ 161.50	$ 16.15	$ 177.65
15	64515	SCREW M5*10	$ 2.20	$ 0.22	$ 2.42
16	64516	FEEDER	$ 3,273.40	$ 327.34	$ 3,600.74
17	64517	RAMP A	$ 130.95	$ 13.10	$ 144.05
18	64518	RAMP B	$ 130.95	$ 13.10	$ 144.05
19	64519	HINGE	$ 157.10	$ 15.71	$ 172.81
20	64520	SCREW M4*10	$ 2.20	$ 0.22	$ 2.42
21	64521	DOOR GLASS	$ 69.85	$ 6.99	$ 76.84
22	64522	FRONT COVER	$ 654.70	$ 65.47	$ 720.17
23	64523	BLACK SCREW	$ 17.45	$ 1.75	$ 19.20
24	64524	INOX CUBE	$ 196.40	$ 19.64	$ 216.04
25	64525	TRAY FOR GLASSES	$ 87.30	$ 8.73	$ 96.03
26	64526	GRATING FOR GLASSES	$ 109.10	$ 10.91	$ 120.01
27	64527	FILTER	$ 157.10	$ 15.71	$ 172.81
28	64528	FILTER SHOOTER	$ 34.90	$ 3.49	$ 38.39
29	64529	FILTER FUNNEL	$ 371.00	$ 37.10	$ 408.10
30	64530	BOTTOM M4	$ 26.20	$ 2.62	$ 28.82
31	64531	PEEL EXTRACTOR R	$ 65.45	$ 6.55	$ 72.00
32	64532	PEEL EXTRACTOR L	$ 65.45	$ 6.55	$ 72.00
33	64533	SUPPORT EXTRACTOR R	$ 52.35	$ 5.24	$ 57.59
34	64534	SUPPORT EXTRACTOR I	$ 52.35	$ 5.24	$ 57.59
35	64535	SQUEEZER BALL	$ 139.65	$ 13.97	$ 153.62
36	64536	SUPPORT CUTTING BLADE	$ 87.30	$ 8.73	$ 96.03
37	64537	CUTTING BLADE	$ 157.10	$ 15.71	$ 172.81
38	64538	SCREW M5*10	$ 2.20	$ 0.22	$ 2.42
39	64539	YELLOW SCREW	$ 17.45	$ 1.75	$ 19.20
40	64540	HOLLOW ITEM	$ 139.65	$ 13.97	$ 153.62
41	64541	SUPPORT FRONT COVER	$ 26.20	$ 2.62	$ 28.82
42	64542	SQUEEZER SHAFT 4	$ 200.75	$ 20.08	$ 220.83
43	64543	SQUEEZER SHAFT 3	$ 200.75	$ 20.08	$ 220.83
44	64544	SQUEEZER SHAFT 2	$ 200.75	$ 20.08	$ 220.83

FRUCOSOL SELF SERVICE JUICER
SPARE PARTS LIST
2018

Current for Period
Jan 2018 - Jun 2018

DIAGRAM PART	PART NO	DESCRIPTION	LIST EX GST	GST	LIST INC GST
45	64545	SQUEEZER SHAFT 1	$ 200.75	$ 20.08	$ 220.83
46	64546	PEG 35'	$ 65.45	$ 6.55	$ 72.00
47	64547	PEG 55'	$ 65.45	$ 6.55	$ 72.00
48	64548	BEARING OF SQUEEZER SHAFT	$ 52.35	$ 5.24	$ 57.59
49	64549	O-RING SEAL	$ 6.55	$ 0.66	$ 7.21
50	64550	YELLOW SPACER	$ 30.55	$ 3.06	$ 33.61
51	64551	PEG 78'	$ 87.30	$ 8.73	$ 96.03
52	64552	SECURITY SWITCH	$ 30.55	$ 3.06	$ 33.61
53	64553	FEEDER SWITCH	$ 17.45	$ 1.75	$ 19.20
54	64554	CONICAL GEAR 29	$ 192.05	$ 19.21	$ 211.26
55	64555	CONICAL GEAR 14	$ 165.85	$ 16.59	$ 182.44
56	64556	SEPARATOR LARGE	$ 26.20	$ 2.62	$ 28.82
57	64557	SEPARATOR SHORT	$ 26.20	$ 2.62	$ 28.82
58	64558	SWITCH	$ 17.45	$ 1.75	$ 19.20
59	64559	FUSE HOLDER	$ 13.10	$ 1.31	$ 14.41
60	64560	FUSE	$ 2.20	$ 0.22	$ 2.42
61	64561	MOTOR	$ 1,091.15	$ 109.12	$ 1,200.27
62	64562	NETWORK CABLE COVER	$ 26.20	$ 2.62	$ 28.82
63	64563	NETWORK CABLE	$ 52.35	$ 5.24	$ 57.59
64	64564	MOTOR CAPACITOR	$ 78.55	$ 7.86	$ 86.41
65	64565	JUNCTION BOX	$ -	$ -	$ -
66	64566	SUPPORT JUNCTION BOX	$ -	$ -	$ -
67	64567	LEG	$ 17.45	$ 1.75	$ 19.20
68	64568	SCREW M5*10	$ 2.20	$ 0.22	$ 2.42
69	64569	WASHER M8	$ 2.60	$ 0.26	$ 2.86
70	64570	NUT M8	$ 2.60	$ 0.26	$ 2.86
71	64571	SCREW M8*25	$ 2.20	$ 0.22	$ 2.42
72	64572	TOOTH GEARING 45-4	$ 104.75	$ 10.48	$ 115.23
73	64573	TOOTH GEARING 45-3	$ 104.75	$ 10.48	$ 115.23
74	64574	TOOTH GEARING 60-1	$ 113.50	$ 11.35	$ 124.85
75	64575	TOOTH GEARING 60-2	$ 113.50	$ 11.35	$ 124.85
77	64577	TAP	$ 218.25	$ 21.83	$ 240.08
78	64578	FIX TAP	$ 4.35	$ 0.44	$ 4.79
79	64579	PHOTOCELL	$ 283.70	$ 28.37	$ 312.07
80	64580	RELAY	$ 74.20	$ 7.42	$ 81.62
81	64581	BASE RELAY	$ 353.55	$ 35.36	$ 388.91
82	64582	STAND	$ 2,618.70	$ 261.87	$ 2,880.57
83	64583	WHEEL	$ 82.95	$ 8.30	$ 91.25
84	64584	WHEEL WITH BRAKE	$ 82.95	$ 8.30	$ 91.25
85	64585	SUPPORT SET INO OUTPUT	$ 152.75	$ 15.28	$ 168.03
86	64586	STAND SHOOTER	$ 26.20	$ 2.62	$ 28.82
87	64587	STAND LOCK	$ 13.10	$ 1.31	$ 14.41
88	64588	ADJUSTABLE TRAY FOR GLASSES	$ 501.90	$ 50.19	$ 552.09
89	64589	ADJUSTABLE GRATING FOR GLASSES	$ 183.30	$ 18.33	$ 201.63

FRUCOSOL SELF SERVICE JUICER
SPARE PARTS LIST
2018
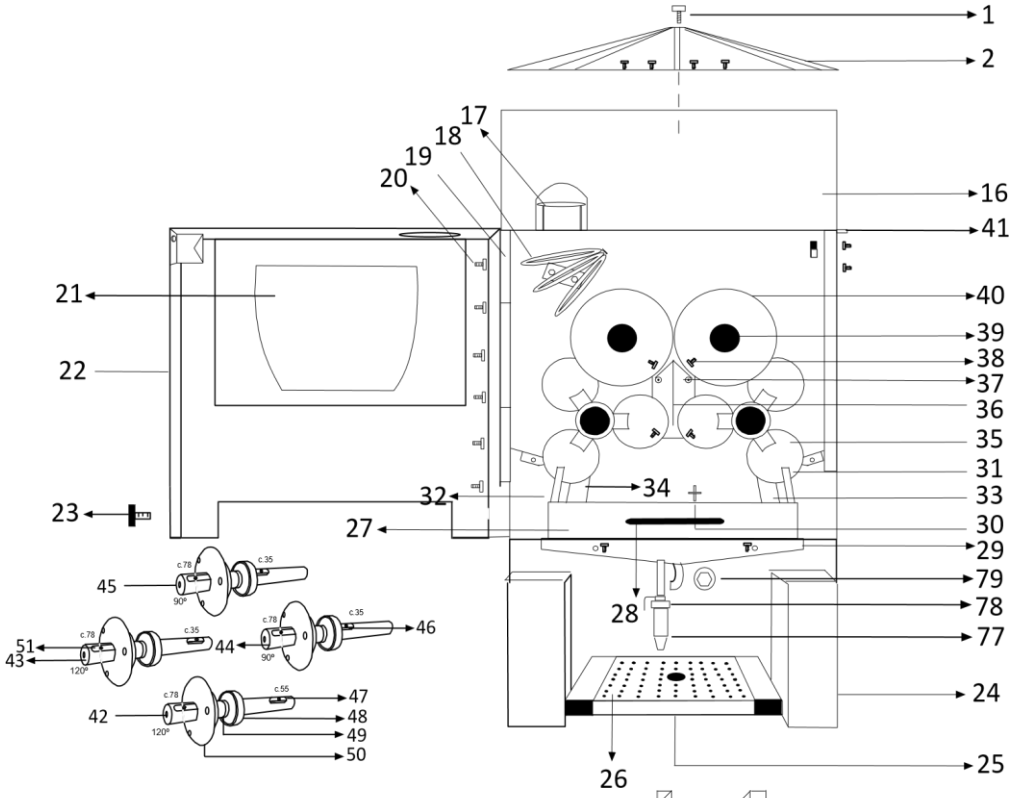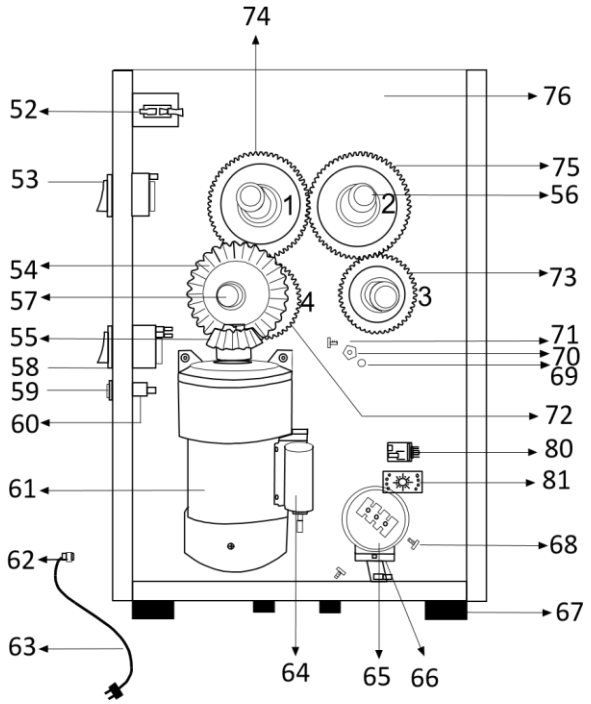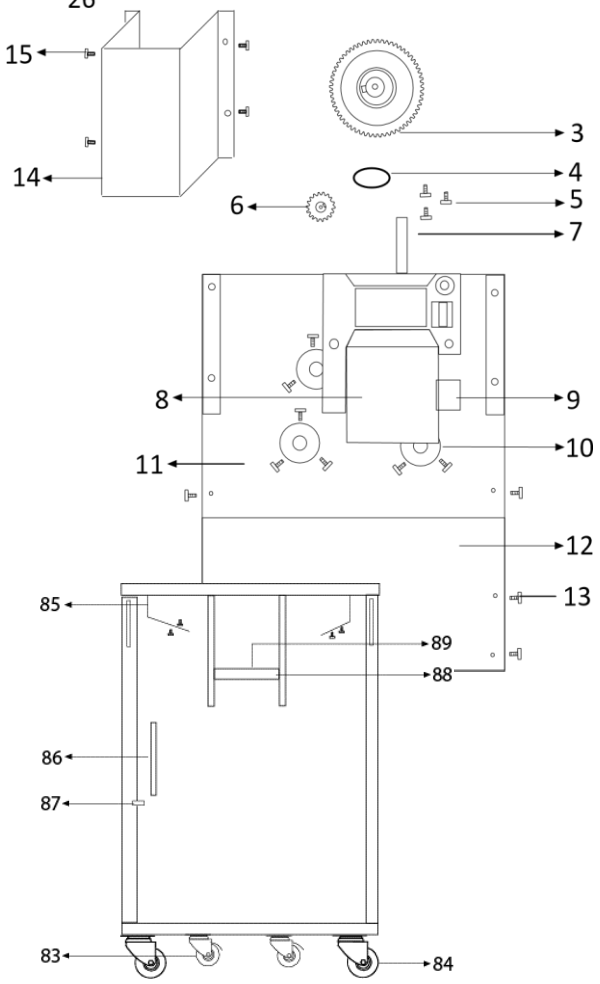
Current for Period
Jan 2018 - Jun 2018