FRUCOSOL SV-1000 GLASS POLISHER
SPARE PARTS LIST
2018

Current for Period
Jan 2018 - Jun 2018

DIAGRAM PART	PART NO	DESCRIPTION	LIST EX GST	GST	LIST INC GST
1	93101	RUBBER FOOT	$ 26.20	$ 2.62	$ 28.82
3	93103	NETWORK CABLE	$ 52.35	$ 5.24	$ 57.59
4	93104	NETWORK CABLE COVER	$ 26.20	$ 2.62	$ 28.82
5	93105	FUSE	$ 4.20	$ 0.42	$ 4.62
6	93106	FUSE HOLDER	$ 13.10	$ 1.31	$ 14.41
7	93107	SWITCH	$ 17.45	$ 1.75	$ 19.20
8	93108	FAN	$ 261.80	$ 26.18	$ 287.98
9	93109	MOTOR	$ 872.70	$ 87.27	$ 959.97
10	93110	MOTOR CAPACITOR	$ 87.25	$ 8.73	$ 95.98
11	93111	FAN CAPACITOR	$ 87.25	$ 8.73	$ 95.98
21	93121	HEATING ELEMENT	$ 261.80	$ 26.18	$ 287.98
23	93123	SINGLE CHANNEL PULLEY	$ 78.55	$ 7.86	$ 86.41
24	93124	DRAGGING BELT	$ 104.75	$ 10.48	$ 115.23
28	93128	CLIP B	$ 13.10	$ 1.31	$ 14.41
29	93129	COILED RIVET	$ 78.55	$ 7.86	$ 86.41
30	93130	BEARING	$ 61.10	$ 6.11	$ 67.21
31	93131	CLIP A	$ 13.10	$ 1.31	$ 14.41
32	93132	DOUBLE CHANNEL PULLEY A	$ 104.75	$ 10.48	$ 115.23
33	93133	DOUBLE CHANNEL PULLEY B	$ 104.75	$ 10.48	$ 115.23
34	93134	UPPER LID	$ -	$ -	$ -
40	93140	BRUSH A	$ 115.00	$ 11.50	$ 126.50
41	93141	BRUSH B	$ 115.00	$ 11.50	$ 126.50
-	93142	BRUSH SUPERFINE	$ 115.00	$ 11.50	$ 126.50

FRUCOSOL SV-1000 GLASS POLISHER
SPARE PARTS LIST
2018
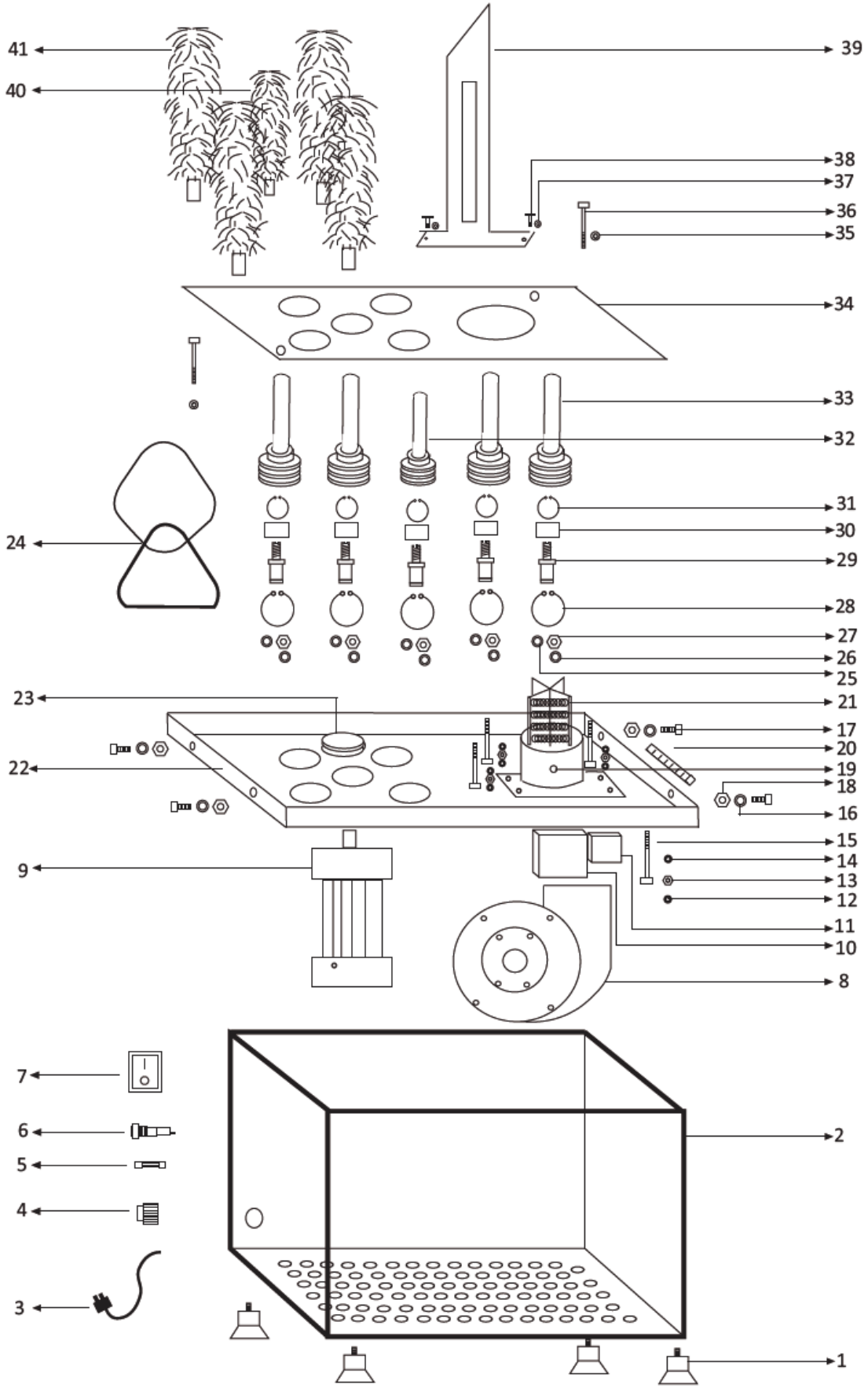
Current for Period
Jan 2018 - Jun 2018