# SEMAK VITABLEND VB250
# SPARE PARTS LIST
# 2018

Current for Period
Jan 2018 - Jun 2018

| DIAGRAM PART | PART NO | DESCRIPTION | LIST EX GST | GST | LIST INC GST |
|---|---|---|---|---|---|
| 1 | 91114 | KIT MOTOR | $ 150.00 | $ 15.00 | $ 165.00 |
| 2 | 91115 | KIT POWER CORD | $ 20.85 | $ 2.09 | $ 22.94 |
| 3 | 91072 | KIT BRACKET POWER CORD | $ 13.90 | $ 1.39 | $ 15.29 |
| 4 | 91073 | KIT CAPACITOR | $ 17.05 | $ 1.71 | $ 18.76 |
| 5 | 91074 | KIT SWITCH BUTTON | $ 47.10 | $ 4.71 | $ 51.81 |
| 6 | 91075 | KIT UPPER HOUSINGS | $ 70.00 | $ 7.00 | $ 77.00 |
| 7 | 91076 | KIT SCREWS MOTOR 6030 DIN 7985 M4X10 | $ 6.90 | $ 0.69 | $ 7.59 |
| 8 | 91077 | KIT CAPS-SCREWS ABC VB250 | $ 9.65 | $ 0.97 | $ 10.62 |
| 9 | 91116 | KIT TUBE 250 | $ 100.15 | $ 10.02 | $ 110.17 |
| 10 | 91079 | KIT CAPS-SCREWS D VB250 | $ 12.25 | $ 1.23 | $ 13.48 |
| 11 | 91117 | KIT TRANSMISSION SHAFT 250 | $ 54.10 | $ 5.41 | $ 59.51 |
| 12 | 91104 | KIT LOWER BEARING BUSH 6X16X7 | $ 43.30 | $ 4.33 | $ 47.63 |
| 13 | 91082 | KIT JOINTS | $ 9.00 | $ 0.90 | $ 9.90 |
| 14 | 91083 | KIT BLADE GUARD Ø 40 MM | $ 89.05 | $ 8.91 | $ 97.96 |
| 15 | 91084 | KIT BLADE Ø 40 MM | $ 26.55 | $ 2.66 | $ 29.21 |
| 16 | 91085 | KIT SCREW FOR BLADE Ø 40 MM | $ 7.65 | $ 0.77 | $ 8.42 |
| 17 | 91118 | NYLON DRIVE COUPLING | $ 21.65 | $ 2.17 | $ 23.82 |

| ITEM | PART NO | DESCRIPTION |
|---|---|---|
| 1 | 91114 | KIT MOTOR 6030 |
| 2 | 91115 | KIT MOTOR CORD 3010 |
| 3 | 91072 | KIT BRACKET POWER CORD 9000 |
| 4 | 91073 | KIT CAPACITOR |
| 5 | 91074 | KIT SWITCH BUTTON |
| 6 | 91075 | KIT UPPER HOUSINGS 6030 |
| 7 | 91076 | KIT SCREWS MOTOR 6030 DIN 7985 M4 X 10 |
| 8 | 91077 | KIT CAPS-SCREWS ABC TF-250 |
| 9 | 91116 | KIT TUBE TF-250 |
| 10 | 91079 | KIT CAPS-SCREWS D TF-250 |
| 11 | 91117 | KIT TRANSMISSION SHAFT TF-250 |
| 12 | 91104 | KIT LOWER BEARING BUSH 6X16X7 |
| 13 | 91082 | KIT JOINTS |
| 14 | 91083 | KIT BLADE GUARD Ø40MM |
| 15 | 91084 | KIT BLADE Ø 40MM |
| 16 | 91085 | KIT SCREW FOR BLADE Ø 40MM |
| 17 | 91118 | KIT COUPLING VB250 NYLON DRVIE |
| 18 | 91087 | RETAINING CIRCLIP |
| 20 | 91107 | KIT WALL SUPPORT |

# SEMAK VITABLEND VB250
# SPARE PARTS LIST
# 2018

Current for Period
Jan 2018 - Jun 2018

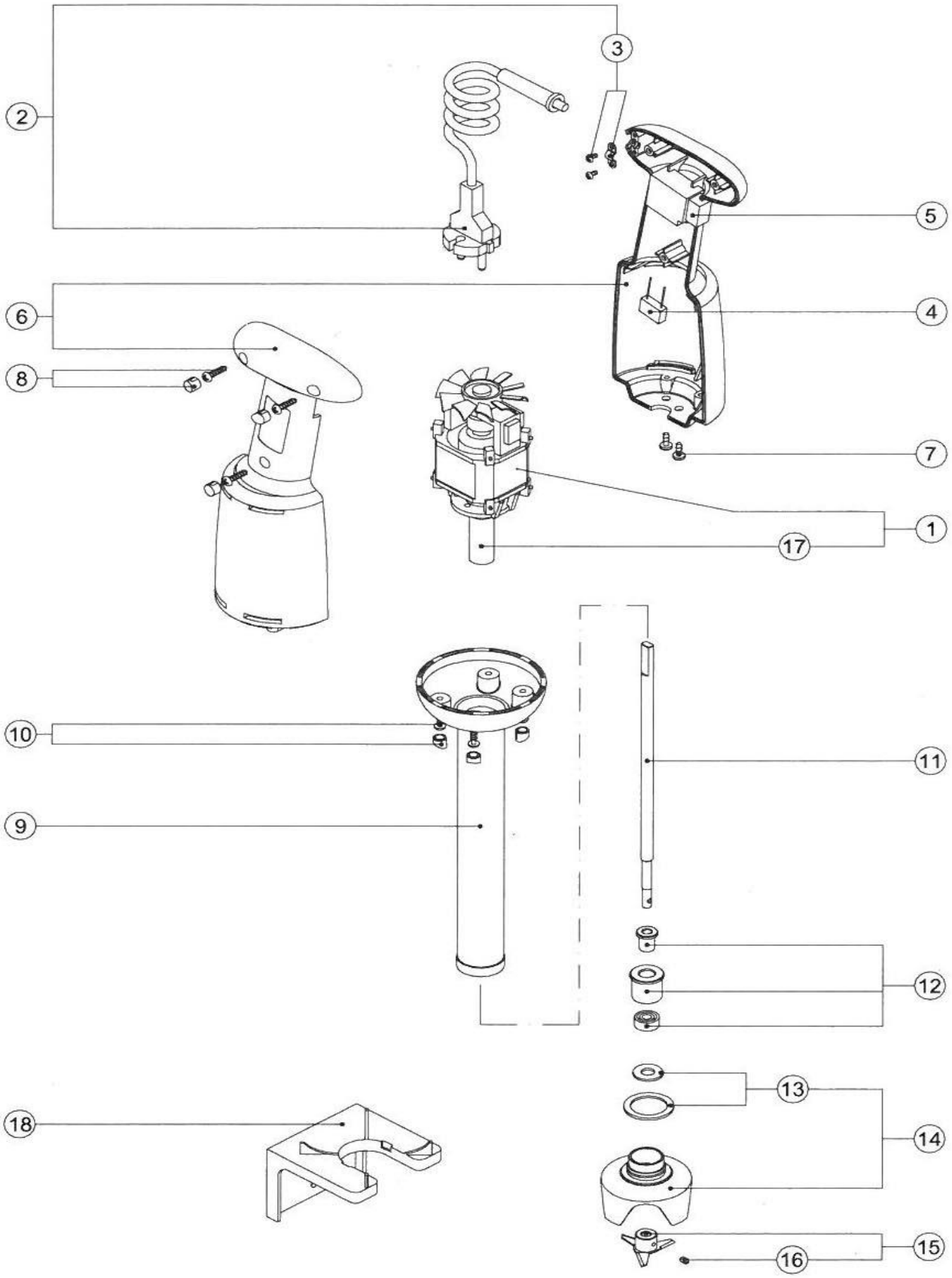

# SEMAK VITABLEND VB250 (PRE 2007 MODEL)
# SPARE PARTS LIST
# 2018

Current for Period
Jan 2018 - Jun 2018

| DIAGRAM PART | PART NO | DESCRIPTION | LIST EX GST | GST | LIST INC GST |
|---|---|---|---|---|---|
| 1 | 91070 | KIT MOTOR | $ 150.00 | $ 15.00 | $ 165.00 |
| 2 | 91071 | KIT POWER CORD | $ 20.85 | $ 2.09 | $ 22.94 |
| 3 | 91072 | KIT BRACKET POWER CORD | $ 13.90 | $ 1.39 | $ 15.29 |
| 4 | 91073 | KIT CAPACITOR | $ 17.05 | $ 1.71 | $ 18.76 |
| 5 | 91074 | KIT SWITCH BUTTON | $ 47.10 | $ 4.71 | $ 51.81 |
| 6 | 91075 | KIT UPPER HOUSINGS | $ 70.00 | $ 7.00 | $ 77.00 |
| 7 | 91076 | KIT SCREWS MOTOR 6030 DIN 7985 M4X10 | $ 6.90 | $ 0.69 | $ 7.59 |
| 8 | 91077 | KIT CAPS-SCREWS ABC VB250 | $ 9.65 | $ 0.97 | $ 10.62 |
| 9 | 91078 | KIT TUBE 250 | $ 100.15 | $ 10.02 | $ 110.17 |
| 10 | 91079 | KIT CAPS-SCREWS D VB250 | $ 12.25 | $ 1.23 | $ 13.48 |
| 11 | 91080 | KIT TRANSMISSION SHAFT 250 | $ 54.10 | $ 5.41 | $ 59.51 |
| 12 | 91081 | KIT LOWER BEARING BUSH 6X16X7 | $ 43.30 | $ 4.33 | $ 47.63 |
| 13 | 91082 | KIT JOINTS | $ 9.00 | $ 0.90 | $ 9.90 |
| 14 | 91083 | KIT BLADE GUARD Ø 40 MM | $ 89.05 | $ 8.91 | $ 97.96 |
| 15 | 91084 | KIT BLADE Ø 40 MM | $ 26.55 | $ 2.66 | $ 29.21 |
| 16 | 91085 | KIT SCREW FOR BLADE Ø 40 MM | $ 7.65 | $ 0.77 | $ 8.42 |
| 17 | 91086 | NYLON DRIVE COUPLING | $ 21.65 | $ 2.17 | $ 23.82 |

| ITEM | PART NO | DESCRIPTION |
|---|---|---|
| 1 | 91070 | KIT MOTOR 6030 |
| 2 | 91071 | KIT MOTOR CORD 3010 |
| 3 | 91072 | KIT BRACKET POWER CORD 9000 |
| 4 | 91073 | KIT CAPACITOR |
| 5 | 91074 | KIT SWITCH BUTTON |
| 6 | 91075 | KIT UPPER HOUSINGS 6030 |
| 7 | 91076 | KIT SCREWS MOTOR 6030 DIN 7985 M4 X 10 |
| 8 | 91077 | KIT CAPS-SCREWS ABC TF-250 |
| 9 | 91078 | KIT TUBE TF-250 |
| 10 | 91079 | KIT CAPS-SCREWS D TF-250 |
| 11 | 91080 | KIT TRANSMISSION SHAFT TF-250 |
| 12 | 91081 | KIT LOWER BEARING BUSH 6X16X7 |
| 13 | 91082 | KIT JOINTS |
| 14 | 91083 | KIT BLADE GUARD Ø40MM |
| 15 | 91084 | KIT BLADE Ø 40MM |
| 16 | 91085 | KIT SCREW FOR BLADE Ø 40MM |
| 17 | 91086 | KIT COUPLING VB250 NYLON DRVIE |
| 18 | 92100 | RETAINING CIRCLIP |
| 20 | 91107 | KIT WALL SUPPORT |

# SEMAK VITABLEND VB250 (PRE 2007 MODEL)
# SPARE PARTS LIST
# 2018
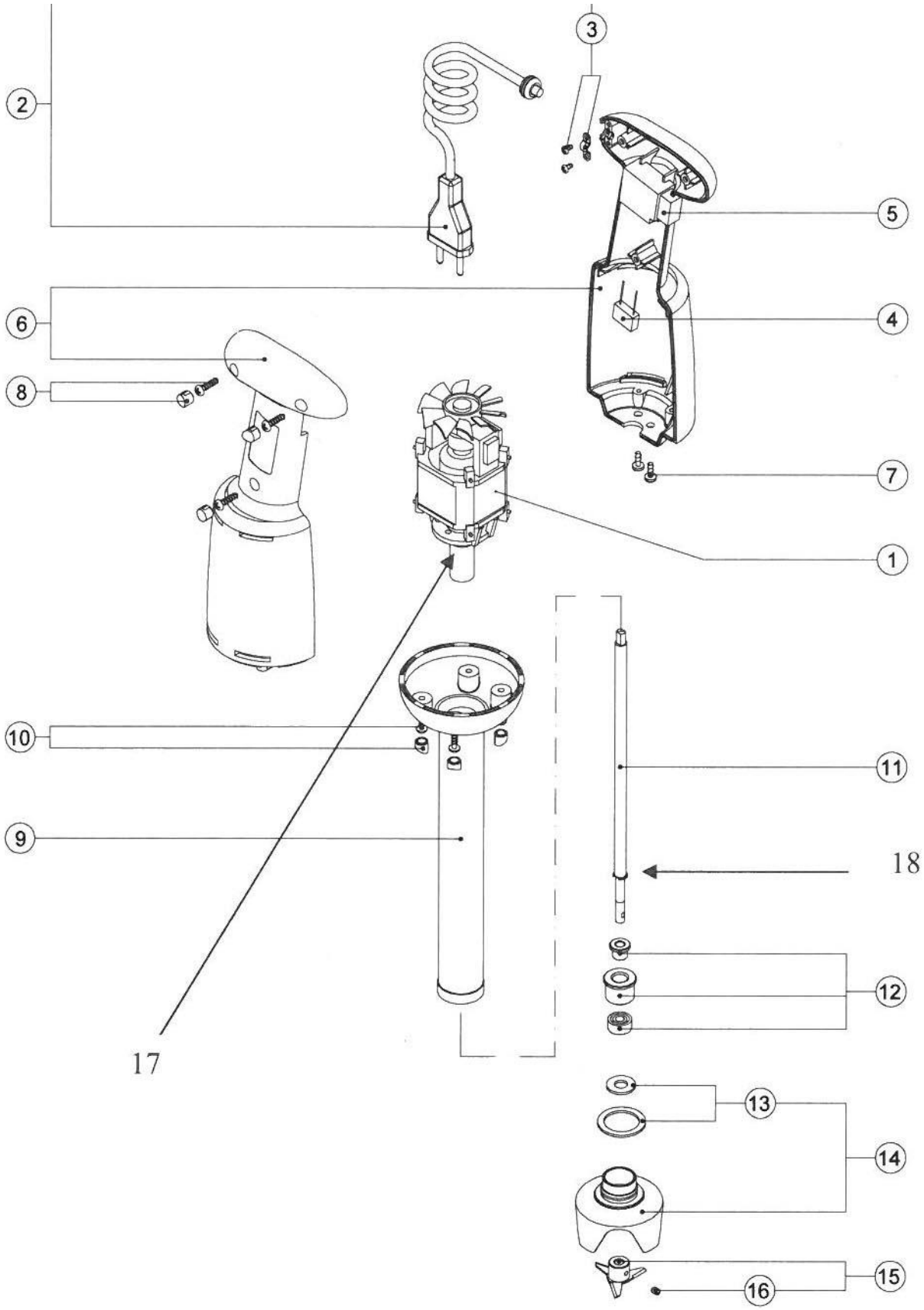
Current for Period
Jan 2018 - Jun 2018