SEMAK VITABLEND 300+ SERIES
SPARE PARTS LIST
2018

Current for Period
Jan 2018 - Jun 2018

PART NO	DESCRIPTION	LIST EX GST	GST	LIST INC GST
	VITABLEND COMPLETE PARTS			
91001	BLENDER ATTACHMENT COMPLETE 300MM SHAFT	$ 358.15	$ 35.82	$ 393.97
91002	BLENDER ATTACHMENT COMPLETE 350MM SHAFT	$ 372.55	$ 37.26	$ 409.81
91003	BLENDER ATTACHMENT COMPLETE 400MM SHAFT	$ 386.90	$ 38.69	$ 425.59
91004	BLENDER ATTACHMENT COMPLETE 500MM SHAFT	$ 430.00	$ 43.00	$ 473.00
91005	WHISK ATTACHMENT 240MM	$ 396.25	$ 39.63	$ 435.88
91006	MOTOR COMPLETE 450W	$ 571.25	$ 57.13	$ 628.38
	MOTOR PARTS			
91007	KIT MOTOR SUIT V10-06	$ 305.00	$ 30.50	$ 335.50
91008	KIT MOTOR LOWER SUPPORT SUIT V10-06	$ 40.00	$ 4.00	$ 44.00
91009	KIT SCREWS MOTOR SUIT V10-06 (8 SCREWS)	$ 8.85	$ 0.89	$ 9.74
91010	KIT LOWER HOUSING SUIT V10-06	$ 54.45	$ 5.45	$ 59.90
91011	KIT BRACE SUIT V10-06 (1 BRACE)	$ 21.20	$ 2.12	$ 23.32
91012	KIT UPPER HOUSING SUIT V10-06	$ 78.15	$ 7.82	$ 85.97
91013	KIT SCREWS UPPER HOUSINGS (2 SCREWS)	$ 5.50	$ 0.55	$ 6.05
91014	KIT SAFETY/STOP BUTTON	$ 18.65	$ 1.87	$ 20.52
91015	KIT POWER CORD 9000	$ 20.85	$ 2.09	$ 22.94
91016	KIT BRACKET POWER CORD 9000	$ 14.85	$ 1.49	$ 16.34
91017	KIT SPEED CONTROL 4705 - OLD MODEL	$ 125.00	$ 12.50	$ 137.50
91503	KIT SPEED CONTROL - NEW MODEL	$ 125.00	$ 12.50	$ 137.50
91018	KIT COMMAND BUTTON	$ 14.05	$ 1.41	$ 15.46
91019	KIT CAPS-SCREWS SUIT V10-06 (7 SCREWS AND 7 CAPS	$ 11.30	$ 1.13	$ 12.43
91020	MOTOR WALL SUPPORT	$ 12.25	$ 1.23	$ 13.48
	HAND BLENDER PARTS			
91021	KIT TUBE 300MM	$ 129.90	$ 12.99	$ 142.89
91022	KIT TUBE 350MM	$ 148.30	$ 14.83	$ 163.13
91023	KIT TUBE 400MM	$ 166.75	$ 16.68	$ 183.43
91024	KIT TUBE 500MM	$ 185.15	$ 18.52	$ 203.67
91025	KIT TRANSMISSION SHAFT 300 MM	$ 100.50	$ 10.05	$ 110.55
91026	KIT TRANSMISSION SHAFT 350 MM	$ 109.60	$ 10.96	$ 120.56
91027	KIT TRANSMISSION SHAFT 400 MM	$ 133.25	$ 13.33	$ 146.58
91028	KIT TRANSMISSION SHAFT 500 MM	$ 158.00	$ 15.80	$ 173.80
91029	KIT INOX BALL BEARING 608 2RS	$ 18.25	$ 1.83	$ 20.08
91030	KIT UPPER BEARING BUSH 15X20X15	$ 18.25	$ 1.83	$ 20.08
91031	KIT LOWER SHAFT	$ 24.10	$ 2.41	$ 26.51
91032	KIT LOWER BEARING BUSH 8X22X7	$ 46.25	$ 4.63	$ 50.88
91033	KIT AUTO-LUBRICATING BUSHING B8X12X12/16X2 (2 AUT	$ 10.10	$ 1.01	$ 11.11
91034	KIT OIL SEAL 8X22X7	$ 18.25	$ 1.83	$ 20.08
91035	KIT JOINTS BT	$ 8.35	$ 0.84	$ 9.19
91036	KIT BLADE GUARD Ø 60 MM	$ 97.80	$ 9.78	$ 107.58
91037	KIT BLADE Ø 60 MM	$ 33.15	$ 3.32	$ 36.47
91038	KIT SCREW BLADE Ø 60 MM	$ 8.70	$ 0.87	$ 9.57
91039	KIT COUPLING MALE-FEMALE	$ 21.65	$ 2.17	$ 23.82
92941	ATTACHMENT WALL SUPPORT	$ 4.45	$ 0.45	$ 4.90

SEMAK VITABLEND 300+ SERIES
SPARE PARTS LIST
2018

Current for Period
Jan 2018 - Jun 2018

WHISK PARTS				
91040	KIT LOWER HOUSING SUIT V10-05	$ 59.95	$ 6.00	$ 65.95
91041	KIT OIL SEALS 8X22X7 SUIT V10-05 (2 SEALS)	$ 18.20	$ 1.82	$ 20.02
91042	KIT BALL BEARING 608 2Z (1 BALL BEARING)	$ 20.10	$ 2.01	$ 22.11
91043	KIT GEAR 2 SUIT V10-05	$ 54.95	$ 5.50	$ 60.45
91044	KIT GEAR 3 SUIT V10-05	$ 11.75	$ 1.18	$ 12.93
91045	KIT SCREWS DIN 965 M3X8 A2	$ 6.55	$ 0.66	$ 7.21
91046	KIT GEAR SHAFT 2-3 SUIT V10-05	$ 8.85	$ 0.89	$ 9.74
91047	KIT WHISK SHAFT SUIT V10-05 (2 SHAFTS)	$ 69.95	$ 7.00	$ 76.95
91048	KIT UPPER HOUSING SUIT V10-05	$ 59.25	$ 5.93	$ 65.18
91049	KIT GEAR 1 SUIT V10-05	$ 90.55	$ 9.06	$ 99.61
91050	KIT SCREWS CL 82 Z 4.6X20 A2 (4 SCREWS)	$ 7.65	$ 0.77	$ 8.42
91051	KIT WHISK SUIT V10-05 (1 WHISK)	$ 53.45	$ 5.35	$ 58.80
91094	ATTACHMENT WALL SUPPORT	$ 4.45	$ 0.45	$ 4.90

SEMAK VITABLEND 300+ SERIES
SPARE PARTS LIST
2018

Current for Period
Jan 2018 - Jun 2018

ITEM	DESCRIPTION	CODE
	SHAFT PARTS	
1	KIT TUBE 300 (BT-300)	91021
	KIT TUBE 350 (BT-350)	91022
	KIT TUBE 400 (BT-400)	91023
	KIT TUBE 500 (BT-500)	91024
2	KIT TRANSMISSION SHAFT 300 (BT-300)	91025
	KIT TRANSMISSION SHAFT 350 (BT-350)	91026
	KIT TRANSMISSION SHAFT 400 (BT-400)	91027
	KIT TRANSMISSION SHAFT 500 (BT-500)	91028
3	KIT INOX BALL BEARING 608 2RS	91029
4	KIT INOX BALL BEARING 61902 2RS	91052
5	KIT LOWER SHAFT BT	91031
6	KIT LOWER BEARING BUSH BT	91032
7	KIT OIL SEAL 8X22X7	91034
8	KIT JOINTS BT	91035
9	KIT BLADE GUARD Ø 60 MM	91036
10	KIT BLADE Ø 60 MM	91037
11	KIT SCREW BLADE Ø 60 MM	91038
12	KIT COUPLING MALE-FEMALE	91039
13	KIT COUPLING TUBE	91054

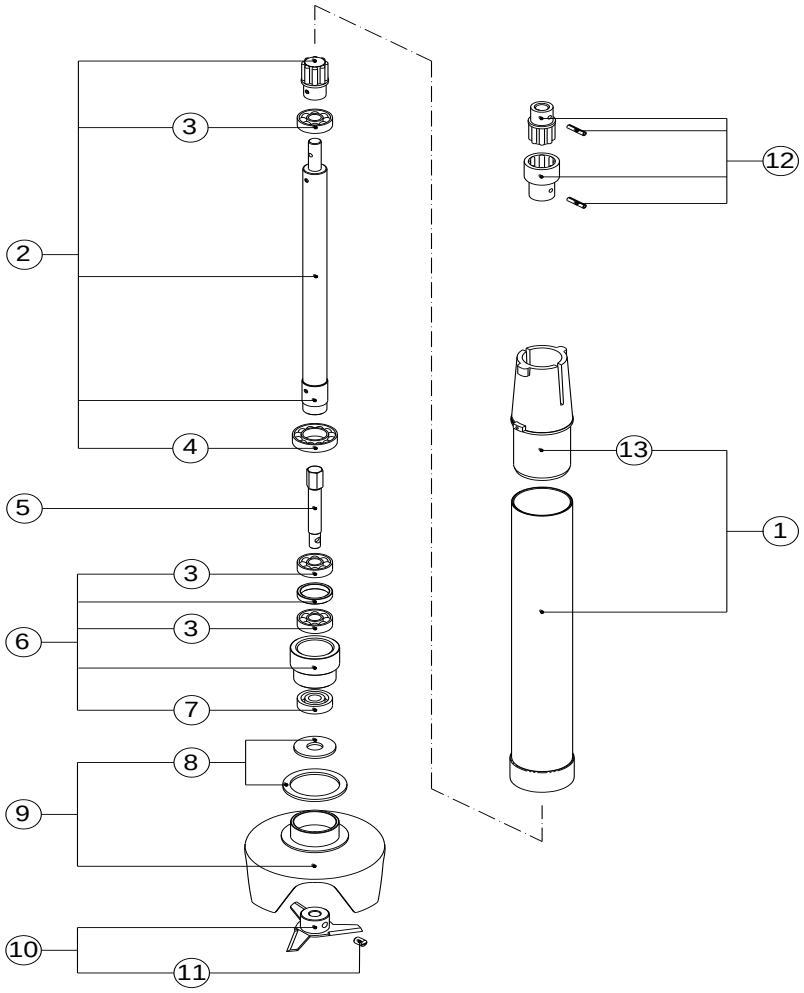

SEMAK VITABLEND 300+ SERIES
SPARE PARTS LIST
2018

Current for Period
Jan 2018 - Jun 2018

ITEM	DESCRIPTION	CODE
	MOTOR PARTS	
1	KIT MOTOR SUIT V10-06	91007
2	KIT MOTOR LOWER SUPPORT SUIT V10-06	91008
3	KIT SCREWS MOTOR SUIT V10-06 (8 SCREWS)	91009
4	KIT LOWER HOUSING SUIT V10-06	91010
5	KIT BRACE SUIT V10-06 (1 BRACE)	91011
6	KIT UPPER HOUSING SUIT V10-06	91012
7	KIT SCREWS UPPER HOUSINGS (2 SCREWS)	91013
8	KIT SAFETY/STOP BUTTON	91014
9	KIT POWER CORD 9000	91015
10	KIT BRACKET POWER CORD 9000	91016
11	KIT SPEED CONTROL 4705 - OLD MODEL	91017
11	KIT SPEED CONTROL - NEW MODEL	91503
12	KIT COMMAND BUTTON	91018
13	KIT CAPS-SCREWS SUIT V10-06 (7 SCREWS AND 7 CAPS	91019

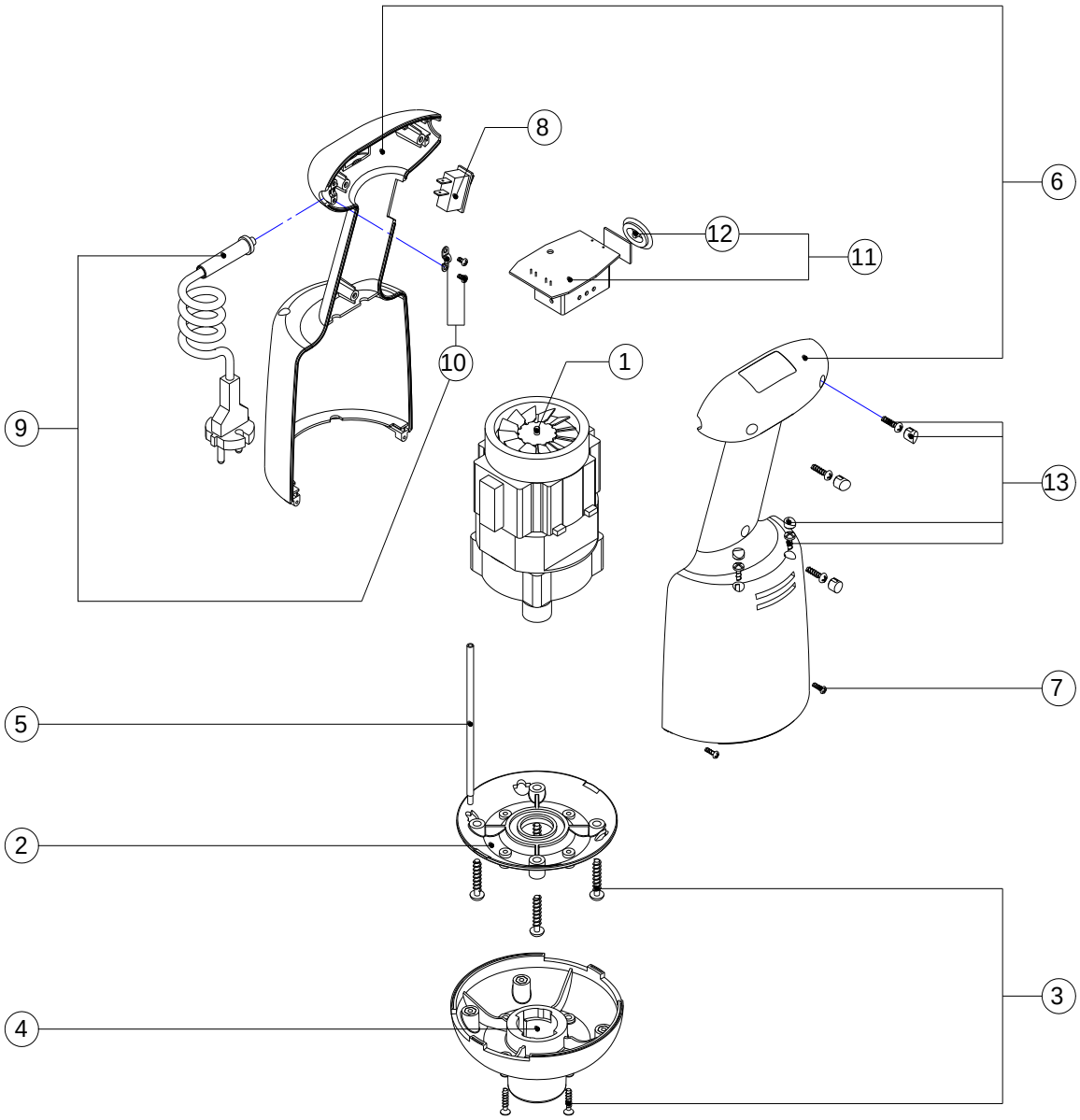

SEMAK VITABLEND 300+ SERIES
SPARE PARTS LIST
2018

Current for Period
Jan 2018 - Jun 2018
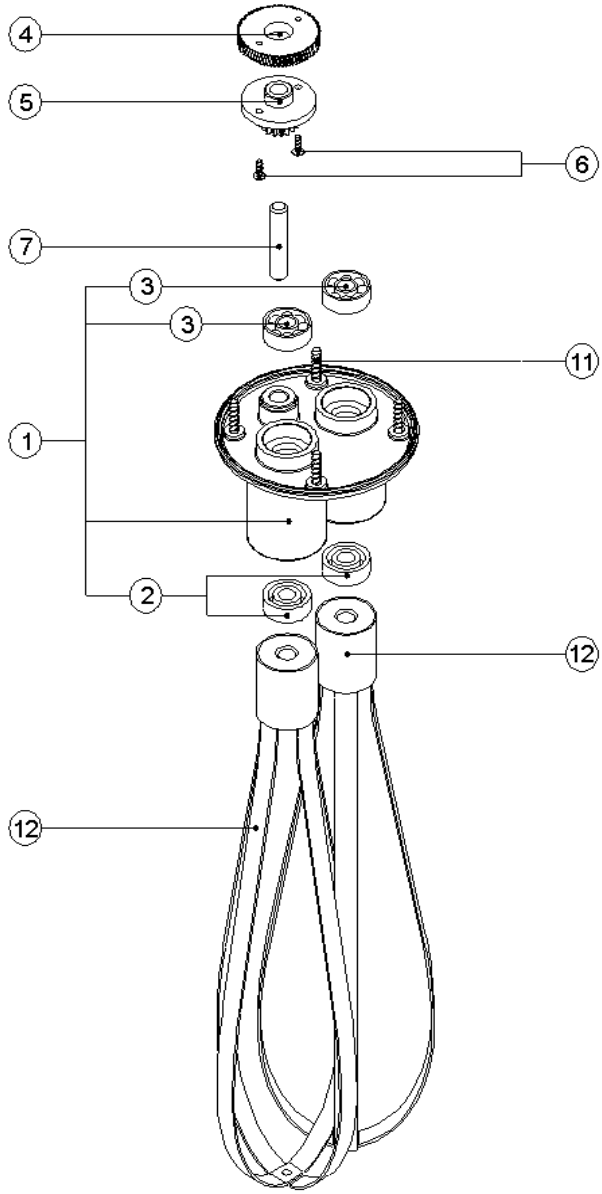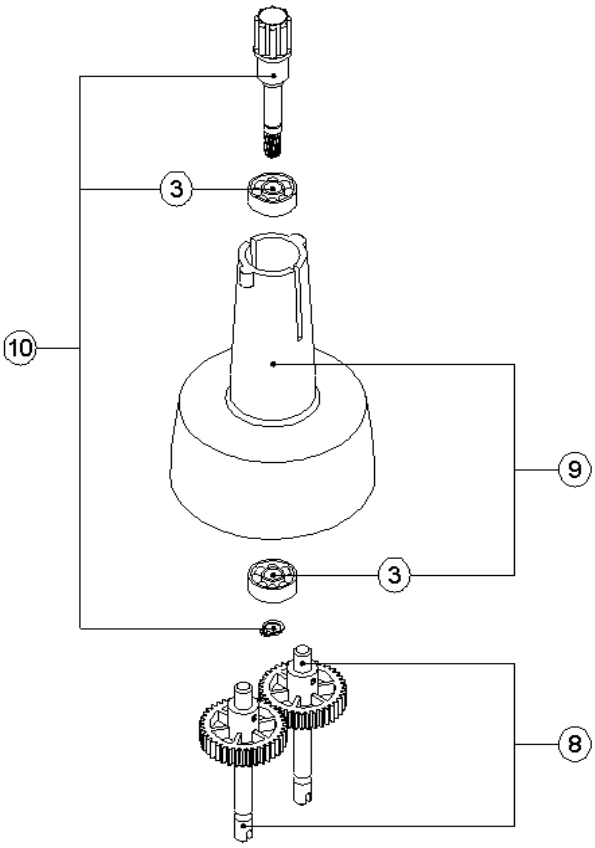
ITEM	DESCRIPTION	CODE
	WHISK PARTS	
1	KIT LOWER HOUSING SUIT V10-05	91040
2	KIT OIL SEALS 8X22X7 SUIT V10-05 (2 SEALS)	91041
3	KIT BALL BEARING 608 2Z (1 BALL BEARING)	91042
4	KIT GEAR 2 SUIT V10-05	91043+91127
5	KIT GEAR 3 SUIT V10-05	91044
6	KIT SCREWS DIN 965 M3X8 A2	91045
7	KIT GEAR SHAFT 2-3 SUIT V10-05	91046
8	KIT WHISK SHAFT SUIT V10-05 (2 SHAFTS)	91047
9	KIT UPPER HOUSING SUIT V10-05	91048
10	KIT GEAR 1 SUIT V10-05	91049
11	KIT SCREWS CL 82 Z 4.6X20 A2 (4 SCREWS)	91050
12	KIT WHISK SUIT V10-05 (1 WHISK)	91051