SEMAK

SEMAK CONTACT GRILL – CG1 & PG1

OPERATION AND WARRANTY BOOKLET

SEMAK AUSTRALIA: FACTORY 18, 87-91 HALLAM SOUTH ROAD, HALLAM VIC 3803

PH 03 9796 4583 FAX 03 9796 4586 WEB WWW.SEMAK.COM.AU

Table of Contents

General Safety Instructions for All Semak Products 4

Safety Instructions 5

Parts Diagram for the Semak Contact Grill 6

Operating Instructions for the Semak Contact Grill 7

Cleaning Instructions for the Semak Contact Grill 8

Service & Maintenance 9

Electrical Compliance 9

Specifications 9

Warranty 9

WARRANTY REGISTRATION 11

WARNING: PLEASE ENSURE THAT ALL SAFETY INSTRUCTIONS ARE UNDERSTOOD BY ALL PERSONS WHO USE THIS APPLIANCE

Arabic

تحـذيـر : تأكد من فهم كل من يستعمل الجهاز لكـافة إحتيـاطات الأمـان وتعلـيمات التشغيـل .

Cambodian

ការព្រមានប្រាប់: សូមប្រាកដឲ្យបានច្បាស់ថាការប្រុងប្រយ័ត្នវ៉ែនតានិរភ័យ និងការណែនាំប្រើទាំងអស់ បានត្រូវកន្ទាស់ប្រាប់ច្បាស់លាស់ល្អ ទោះជាលំអ្នកដែលប្រើប្រាស់ត្រឿងប្រដាប់ទាំងនេះហើយ ។

Chinese

警告：必需確保任何使用這器具的人士，已明瞭一切安全預防措施及操作指示。

Croatian

Upozorenje: Budite sigurni da svi koji rade na aparatima znaju o mjerama opreza i funkciji ovih aparata.

French

Attention: Veuillez vous assurer que toutes les personnes utilisant l'appareil comprennent tous les conseils d'utilisation et précautions de sécurité.

German

Warnung: Versichern Sie sich, daß alle Sicherheitsvorkehrungen und Bedienungsanleitungen von allen Benutzern des Gerätes verstanden worden sind.

Greek

Προειδοποίηση: Βεβαιωθήτε ότι όλα τα προφυλακτικά μέτρα ασφαλείας και οι οδηγίες λειτουργίας κατανοούνται από όλα τα άτομα που χρησιμοποιούν τη συσκευή.

Italian

Attenzione: assicuratevi che tutti coloro che adoperano i macchinari conoscano le misure di sicurezza e le istruzioni relative al funzionamento.

Macedonian

Предупредување: Осигурајте сите оние кои користат апарати ги разбираат мерките за безбедност и упатства за работа.

Malay

Amaran: Pastikan bahawa semua langkah keselamatan dan keterangan operasi telah difahami oleh semua pengguna alat ini.

Polish

Ostrzeżenie: upewnij się, że wszystkie środki ostrożności i instrukcje obsługi są rozumiane przez wszystkich używających tego urządzenia.

Portugese

Atenção: Assegure-se de que todas as medidas de segurança e instruções de funcionamento são compreendidas por todos aqueles que usam este aparelho.

Russian

Предупреждение: Позаботьтесь о том, чтобы все меры безопасности и инструкции по эксплуатации были поняты всеми, кто пользуется этим устройством.

Serbian

Упозорење: Водите рачуна да сви који употребљаааају овај уређај знају мере предострожности и упутства за руковање.

Spanish

Advertencia: Haga que las precauciones e instrucciones para el uso de este aparato sean entendidas por todos los que lo usan.

Tagalog

Babala: Siguruhing ang lahat nu mga pangkaligtasang pag-iingat at mga tagubilin hinggil sa pagpapaandar ay naiintindihan ng lahat ng gumagamit ng kasangakapan.

Turkish

Uyarı: Tüm güvenlik önlemlerinin ve aygıtı çalıştırma talimatlarının aygıtı kullanan herkes tarafından anlaşılmış olmasını sağlayınız.

Vietnamese

Lưu ý: Chắc chắn rằng những người sử dụng máy đều đã hiểu rõ tất cả các chỉ dẫn về cách vận hành máy và các dự phòng an toàn.

RETAIN THESE SAFETY INSTRUCTIONS

General Safety Instructions for All Semak Products

- Do not use the appliance for other than its intended use.
- Never leave the appliance unattended when in use.
- The appliance should not be used by children or infirm persons and close supervision is necessary when used near such persons.
- Always switch off at power outlet before removing the plug. Remove by holding the plug – do not pull the cord.
- When the appliance is not in use, or prior to cleaning, always switch off the power and remove the plug.
- To avoid the risk of electric shock, do not immerse the plug, cord or any part of the appliance in water or any other liquid.
- Do not use near a stove or heat source and do not let the cord come in contact with any hot surface.
- Do not use the appliance with an extension cord unless that cord has been checked and tested by a qualified technician or if it is an extension cord that has been manufactured by a reliable electrical goods manufacturer and has not been altered in any way.
- Do not operate any appliance with a damaged cord or plug, or after the appliance malfunctions or has been dropped or damaged in anyway. Return to Semak or an authorised service agent for repair.
- CAUTION Hot Surfaces.
- NEVER leave the appliance ON unattended. ALWAYS unplug the contact grill after use.

Safety Instructions

- The Contact Grill is a commercial appliance and should only be operated by trained individuals.
- Do not dismantle or alter the machine.
- Do not lift the upper module plate with sudden force, as injury can be caused.
- Before cleaning, unplug the machine and cut off power supply.
- Do not spray water directly on the product. Water can conduct electricity and be very dangerous.
- Do not place heavy object onto the product. Incorrect operation can cause the equipment to be damaged and dangerous.
- High temperature can cause burning, please be aware of the temperature at all times. When the equipment is in use and before or after using it, do not touch the box and module plate because of the high temperature.
- Do not use any power supply which is not certified with safety standards.
- Isolate appliance from power supply during thunder storm to avoid electrical shocks and damage to the appliance.
- Ensure that the appliance is switched off after use.
- If the power supply cord is damaged, it must be replaced by the manufacturer or a registered service agent or a similarly qualified person in order to avoid defect.

Parts Diagram for the Semak Contact Grill

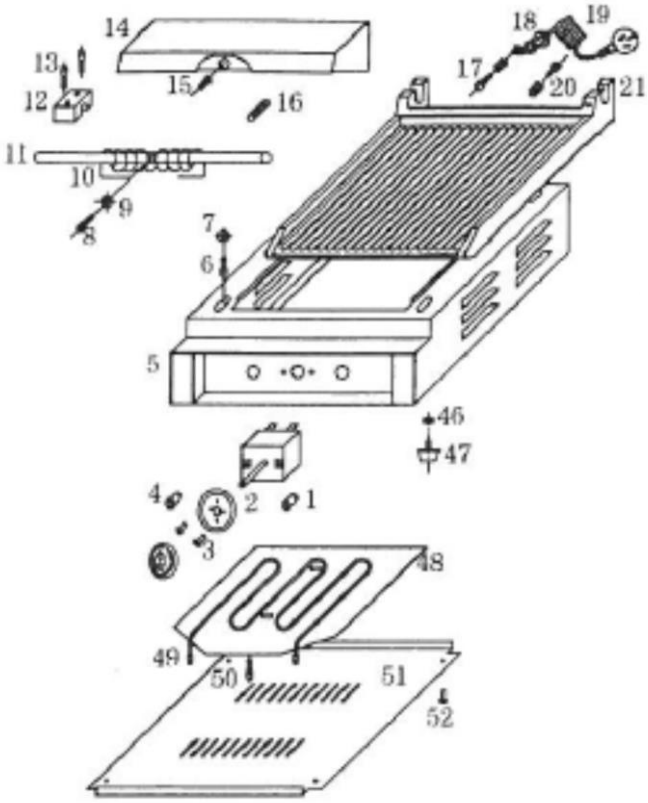

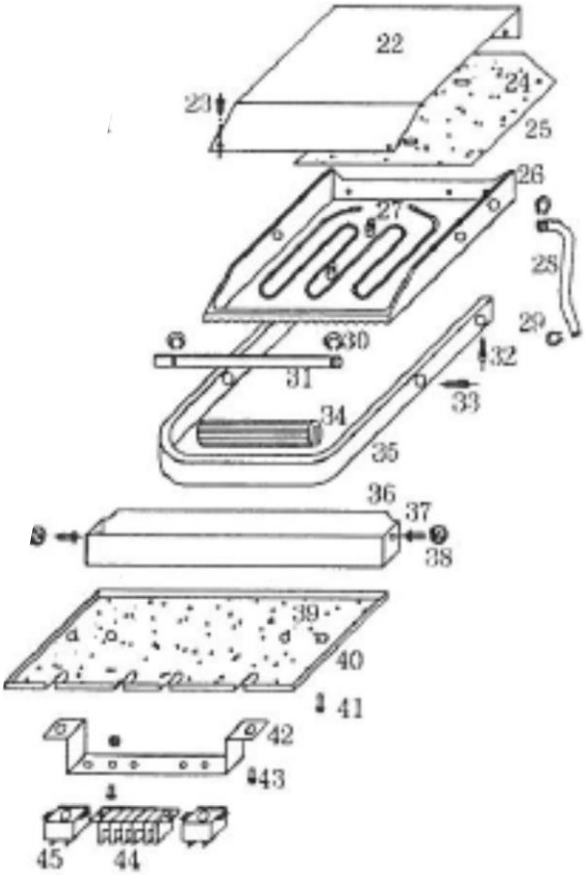

1. Heating Indicator
2. Temperature Controller
3. Cross-Headed Screw M4x6
4. Power Indicator
5. Bottom Hull
6. Internal Hexagon Screw M6x 10
7. Flat Spacer
8. Internal Hexagon Screw M5x25
9. Flat Spacer
10. Wisting Spring
11. Rear Rotary Axle
12. Fastonting Stand
13. Internal Hexagon Screw M6x40
14. Back Upper Covering Board
15. Scross-Headed Screw M4x8
16. Spring Pin
17. Equipotential Ground Screw M6x15
18. Power Supply Wire Jacket
19. Power Cord
20. Power Ground Screw M5x15
21. Grill of Lower Module
22. Upper Module Board
23. Cross-Headed Screw M4x8
24. Heat Insulated Cotton of Upper Module
25. Platen of Upper Electric Heating Tube
26. Grill of Upper Module
27. Electric Heating Tube of Upper Module
28. Incoming Line Tube
29. Spring Check Ring For Axle
30. Spring Check Ring For Tube
31. Axle Of Upper Module
32. Internal Hexagon Screw M5x16
33. Internal Hexagon Screw M6x8
34. Handle
35. Frame of Operation Handle
36. Oil Tray
37. Half of Cheese Head Screw M6x12
38. Small Ball
39. Heat-Insulated Cotton of Lower Module
40. Pressure Plate For Cotton
41. Cross-Headed Screw M4x20
42. Amphenol Connector Plate
43. Cross-Headed Screw M4x8
44. Cermic Connectors
45. Temperature Limiter
46. Hexagon Screw M6x20
47. Rubber Foot
48. Pressure Plate for Electric Heating Tube of Lower Module
49. Electric Heating Tube of Lower Module
50. Internal Hexagon Screw M6x8
51. Bottom Board
52. Cross-Headed Screw M4x8

Operating Instructions for the Semak Contact Grill

1. Make sure that the knob is in the “OFF” position.

2. Plug into a 240V AC power supply.

3. Select a temperature by turning the temperature controller clockwise to the temperature needed. The green lamp on switch indicator means the appliance is on and working. The yellow indicator lamp indicates that the grill plates are heating.

4. The temperature can be adjusted according to different food preferably within 180 °C-250°C. About 8 minutes is needed for the temperature to be raised to 250°C from the time the power is turned on.

5. When the temperature reaches 250°C, lift the upper grill plate and put some edible vegetable oil or spray oil on the lower grill plate before placing the food on it. Close the plates and press down on the handle lightly. Keep an eye on the food until it is suitably done.

6. When the appliance reaches the selected temperature, the temperature controller will power on and off automatically (making the yellow indicator light flick on and off accordingly). The green indicator light will always be on while the appliance is plugged in and turned on.

7. At the lower front of the lower grill is the oil tray. Vegetable oil and the animal oil from grilling will flow to the oil tray from the lower grill plate.

8. Lift the upper grill plate to remove cooked food items once finished.

9. As the temperature lowers, the temperature controller will turn the elements on automatically.

10. On completion of cooking, the temperature controller should be turned to the "off" position. Turn off the power and unplug the appliance.

11. Note: There is temperature overload switch located on the real panel of the appliance. The maximum temperature is 130°C, and reset temperature is <40°C. If the appliance overloads, wait for the temperature to fall below 40°C and press the overload button to reset the appliance.

12. Leave the top grill plate up when the appliance is on and not in use.

Cleaning Instructions for the Semak Contact Grill

1. Cut off the power supply before cleaning in case of accident.

2. Do not place the unit directly under water, use a slightly damp wet cloth with non-corrosive cleaning solution to clean the grill plates and exterior.

3. Clean the grill after each cook in accordance with HACCP Food Safety Program.

4. Grill Plates should be washed with HACCP grade detergent and wiped dry with a HACCP grade food sanitizer. Wipe food grade oil over the plate to protect the grill coating.

5. When not in use for a prolonged period, turn off at the switch and remove plug.

6. Please store the equipment in a safe and dry location to avoid damage.

Service & Maintenance

The Semak Contact Grill does not contain user-serviceable parts. For Service and Repair, contact Semak for your nearest Authorised Service Agent

The Foodservice Industry is deemed a hostile environment within the scope of AS/NZS 3760:2003. Semak Contact Grill MUST be routinely electrically tested for compliance with this standard if used commercially.

It is recommended that a Food Safety program such as HACCP be employed and that routine service and repair be undertaken at the time of electrical testing to ensure the correct operation and function of all parts.

Electrical Compliance

Semak Contact Grills comply with the following electrical standards

CISPR 14

Specifications

Model	CG1/PG1
Dimensions	290 X 295 X 210mm
Volts	220-240V AC 50Hz
Electrical	1800W

Warranty

The Semak Contact Grill is a Commercial appliance. This product is guaranteed for 1 Year* from the date of purchase against mechanical and electrical defects. If the fault is deemed caused by MISUSE/ABUSE the terms of the warranty are invalidated. If the product has been opened or tampered with (ie. In an attempt to repair it) the warranty is invalidated. All warranty repairs should be undertaken by Semak Pty. Ltd.

It is against company policy to authorize warranty repairs over the phone. Service Agents will require a work order number from Semak to conduct warranty repairs.

SEMAK® WARRANTY

THIS WARRANTY APPLIES ONLY TO PRODUCTS MANUFACTURED AND SOLD IN AUSTRALIA

The benefits conferred by this warranty are an alternative to all other rights and remedies in respect of the product which the consumer has under the Trade Practices Act and similar State and Territory Laws.

Semak Australia. Warrant each new SEMAK appliance manufactured by SEMAK to be free from defects in materials or manufacturing process for a period of 12 Months from the date of original purchase.

Should defects due to faulty materials or manufacturing process develop within the warranty period, the appliance will be repaired without charge providing all conditions of this warranty are observed.

1. Proof of Purchase and Warranty card must be retained and available on request.
2. This Warranty is void if the equipment has been damaged due to misuses neglect or is used for a purpose for which it was not suited; and no repairs, alterations or modifications have been attempted by other than Semak or its authorised Service Agent.
3. Semak Australia. Reserves the right to reject a claim for warranty if service is required due to misapplication, improper installation, inadequate wiring, and incorrect voltage conditions. Under no circumstances shall SEMAK or its agents bear responsibility for consequential damages of any kind.
4. Where required by Statute or local authority, equipment must be installed by qualified person in accordance with all relevant regulations. Failure to do this will void product warranty.
5. Cost of transport of any appliance or part to and from SEMAK or its Service Agent is to be paid by the owner.
6. A charge will be made where failure is due to neglect, abuse or accidental damage on the part of the operator, or when no fault can be found or the fault is due to causes outside the control of Semak Australia.
7. The above does not preclude the purchaser from their Statutory rights as a consumer.

Semak Australia
Factory 18
87-91 Hallam South Road
HALLAM VIC 3803

Ph 03 9796 4583
Fax 03 9796 4586
Email technical@semak.com.au
Web www.semak.com.au

WARRANTY REGISTRATION

Retain for Future Reference

DO NOT SEND

Please complete one registration for each Semak appliance.

You may be required to provide this information when requesting after sales service. Please staple your proof of purchase to this page.

Company Name: _____

Company Address: _____

Business Type: _____

Contact: _____

Phone: _____

Fax: _____

Email: _____

Product: _____

Serial Number: _____

Date of Purchase: _____

Place of Purchase: _____

© Semak 2015